Instructions for use

HOME DELUXE
WIR MACHEN ZUHAUSE

CANTOS garden table



Original instructions for use

Designed in Germany

IMPORTANT:
KEEP FOR FUTURE REFERENCE.
READ CAREFULLY!

Table of contents

1. General information 3
1.1. Product overview 3
1.2. General notes 3
1.3. Guarantee 3
2. Information on the instructions for use 4
2.1. Availability of the instructions for use 4
2.2. Information on the translation 4
2.3. Target groups of the instructions for use 4
2.4. Information on the translation 4
2.5. Explanation of symbols 4
2.6. General information on the instructions for use 4
2.7. Intended use 5
2.8. General safety instructions 5
3. Product features 6
3.1. Technical data 6
4. Scope of delivery 6
5. Assembly and operation 7
5.1. Safety instructions 7
5.2. Structure of the product 7
6. Application 10
6.1. Safety instructions 10
6.2. Initial commissioning 10
6.3. Operation 10
6.4. Storage location 10
7. Troubleshooting 10
8. Maintenance and care 11

9. Dismantling 11
9.1. Safety instructions 11
10. Waste disposal 11

Dear customer,

Thank you for choosing a product from **Home Deluxe GmbH**. We hope you enjoy your new CALIDO garden table.

The instructions for use support you in the installation, commissioning, operation and maintenance of the product. The instructions for use and the safety instructions must be read carefully and in full. Observe these instructions to avoid hazards.

1. General information

1.1. Product overview

Model:

Garden table CANTOS - 150 x 75 cm	|	Item ID: 23641	|	Variant ID: 57728
Garden seating group CANTOS SEDIA	|	Item ID: 23643	|	Variant ID: 57730

1.2. General notes

In order to fulfil our claim, we are constantly improving quality, simplifying installation and operation and adapting the products to customer requirements. Due to these changes, the current version of the instructions for use can be found on our homepage.

The term "product" is used in the instructions for use for the "CANTOS garden table" and the "CANTOS SEDIA garden seating group".

1.3. Guarantee

The statutory liability for defects and warranty rights apply from the date of purchase.
Home Deluxe GmbH accepts no liability for damage caused by non-compliance with the instructions for use. Complaints arising from improper installation or use are excluded from the warranty. In the event of defects in the product, please contact our customer service in writing using the contact form on our homepage, stating the product name, serial number and a photo of the type plate:

Home Deluxe GmbH
Schanzeweg 2
32312 Lübbecke
Germany
Tel: +49 (0)5743 6181-0
www.home-deluxe-gmbh.de

If you have any further questions, please contact our customer service team using the contact form.

2. Information on the instructions for use

2.1. Availability of the instructions for use

The instructions for use are part of the product and should be kept complete and in the immediate vicinity of the product.

2.2. Information on the translation

The original instructions for use were written in German. Any other language available is a translation of the German version.

2.3. Target groups of the instructions for use

The instructions for use must be read and observed by every person involved in one of the following activities or uses:

- Unpacking
- Assembly / Installation
- Commissioning / Operation
- Maintenance / inspection / care
- Troubleshooting / repair
- Waste disposal

2.4. Information on the translation

The original instructions for use were written in German. Any other language available is a translation of the German version.

2.5. Explanation of symbols

Symbol	Explanation of symbols
	**WARNING** The symbol indicates possible dangers that could result in fatal or serious injuries. Before carrying out the corresponding installation or application step, read the corresponding note.
	**INFO** The symbol provides important information and indicates material damage. Observe these before carrying out the corresponding installation or application step in order to understand problems and avoid damage.
	**Read instructions for use** The symbol indicates that the operating instructions must be read carefully before mounting/installing and/or operating the appliance.

2.6. General information on the instructions for use

The instructions for use refer to the CANTOS garden table and the CANTOS SEDIA garden seating group. It contains important information on assembly, operation, maintenance and cleaning. The instructions for use, in particular the safety instructions, must be read carefully before using the product; keep the instructions for use in a safe place. Only use the product as described in these instructions for use to prevent accidental injury or damage. If you pass the product on to third parties, these instructions for use must also be handed over.

2.7. Intended use

The product is of high quality, durable and intended or suitable exclusively for private use to a reasonable and customary extent. Furthermore, our product is **not** intended for commercial use. Commercial use is only permitted with the written authorisation of Home Deluxe GmbH

The product is intended as a garden table.

Only use the product as described in these instructions for use. Any other use is considered improper and may result in damage to property or personal injury. The manufacturer accepts no liability for damage caused by improper or incorrect use.

2.8. General safety instructions

General hazard warnings



- **Only** install the product if the scope of delivery is complete and in perfect condition.
- Ensure that all parts are undamaged and correctly installed. There is a risk of injury if they are not installed correctly. Damaged parts can affect safety and function.
- Only place the product on a safe, level and firm surface.
- Do not make any changes to the product
- Check the fastening at regular intervals.

Danger for children



- Keep children away from packaging materials. There is a risk of suffocation!
- Keep children away from the assembly site while the product is being assembled. The scope of delivery contains small parts that can be swallowed or cause serious injury.
- **Risk of tipping over!** The product is not a children's toy, climbing wall or sports equipment. The product can fall over when loaded on one side, which can result in death.
- Children can injure themselves when playing with the product or when pulling up on the product
- Do not place the product directly or in the immediate vicinity of a play area.
- Explain to the children how to use the product correctly and never leave them unsupervised while playing.
- Make sure that small children do not put small parts in their mouths.

Risk of injury

Improper handling of the product can lead to injuries



- Check the product for visible damage before each use.
- Do not make any design changes to the product. Any modifications must be authorised in writing by the manufacturer and carried out in accordance with the instructions.
- If the product is damaged, it must no longer be used. Damaged parts must be repaired or replaced with original spare parts.
- Ensure that the product is permanently installed securely to avoid injury.

Risk of damage



- Improper handling of the product can lead to damage.
- Do not open the packaging with sharp objects (e.g. knives, scissors or similar) as this may damage the product. Be careful when opening.
- Do not use the product near sources of heat or naked flames.

3. Product features

3.1. Technical data

CANTOS	
Table dimensions (L x W x H)	150 x 90 x 75 cm
Table top thickness	5.5 cm
Material	Plastic table / wood look
Weight	19 kg

4. Scope of delivery

Check the packaging for external damage on delivery. Furthermore, immediately after unpacking, check that the scope of delivery is complete and that the product and all components are in perfect condition. Only assemble the product if the scope of delivery is complete and undamaged.

Components/parts

No.	Pos.	Description of the	Quan-tity	Pictures
1	**A**	Table top	1	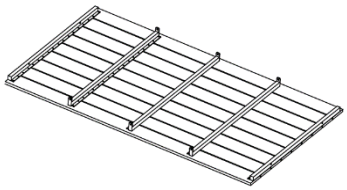
2	**B**	Table leg	2	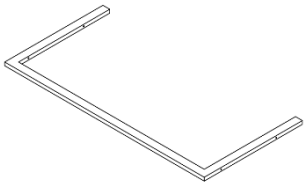
3	**C**	Legrest	2	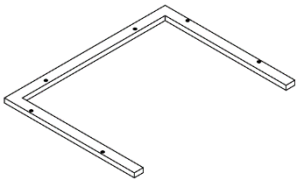
4	**D**	Screw (M6 x 55)	8	

No.	Pos.	Description of the	Quantity	Pictures
5	E	Screw (M6 x 35)	4	
6	F	Screw (M6 x 20)	6	
7	G	U-disc	18	
8	H	Allen key	1	

5. Assembly and operation

5.1. Safety instructions

All health and safety information must be read.

Risk of injury

Improper handling during installation can lead to injuries

- Please make sure that the parcel is opened at the top. Be very careful when opening the parcel as there are fragile parts inside.
- Only place the product on a safe, level and firm surface.
- Use the mounting material supplied.
- Operating errors, assembly errors or damage caused by assembly are excluded from the warranty.
- At least 2 people are required to assemble the product.
- Wear protective clothing such as safety shoes and protective gloves during assembly.

5.2. Structure of the product

The product is delivered disassembled and can be assembled with little effort. Follow the assembly instructions carefully. If the instructions are not followed, the function and safety of the product cannot be guaranteed.

Tools required

	Allen key	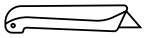	Cutter knife
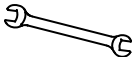	Open-end spanner		

- The following instructions must be read carefully.

Illustration	Description of the
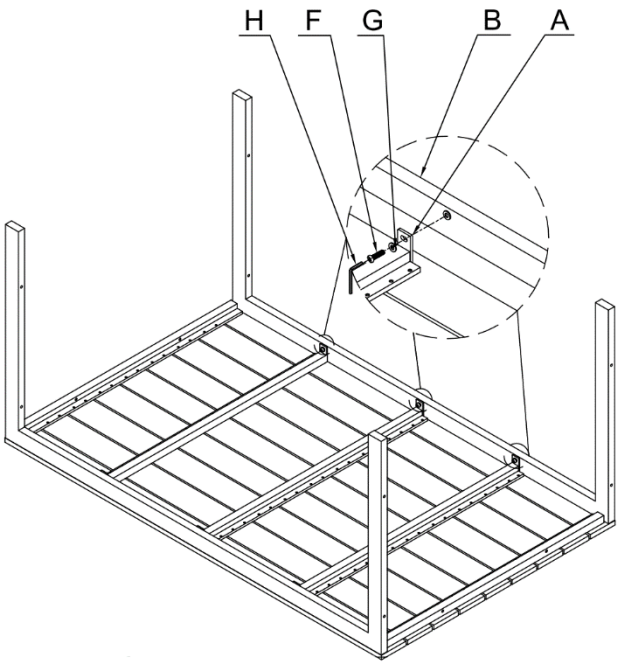	**Step 1:** Assemble the table top (**A**) with the table leg (**B**) using the washer (**G**), screw (**F**) and Allen key (**H**).
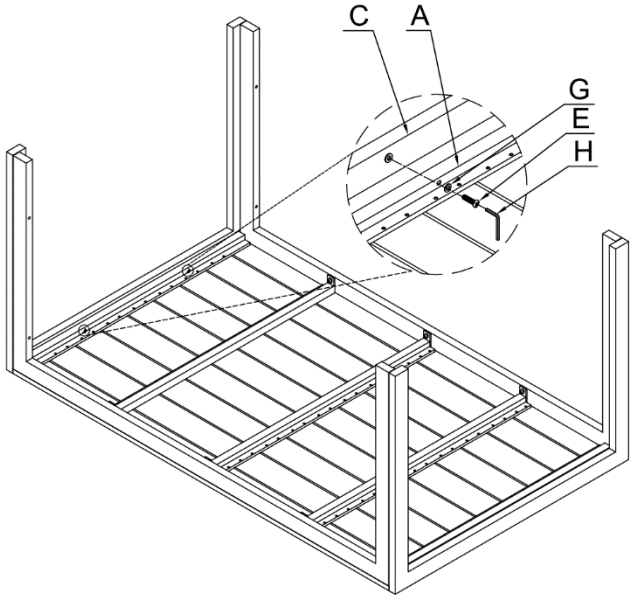	**Step 2:** Fit the leg rest (**C**) to the table top (**A**) using the screws (**E**) and washer (**G**).

Illustration	Description of the
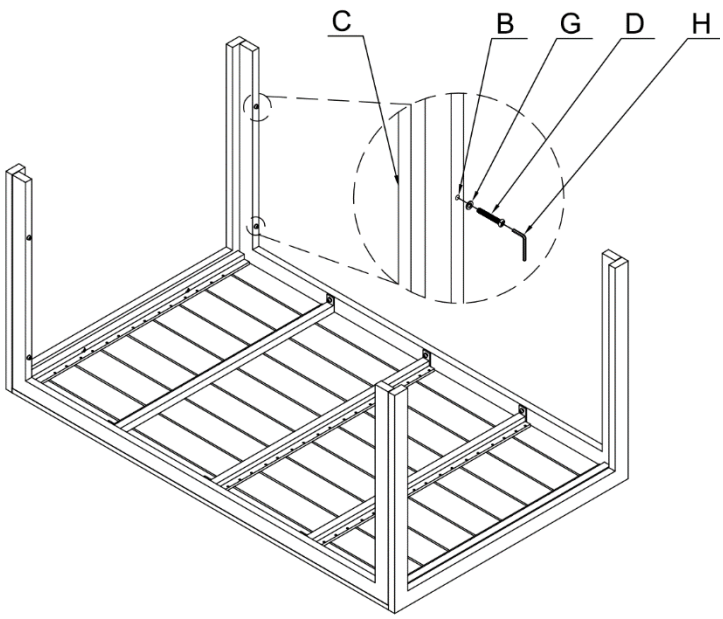	**Step 3:** Attach the leg support (**C**) to the table leg (**B**) using the screws (**D**) and washer (**G**).
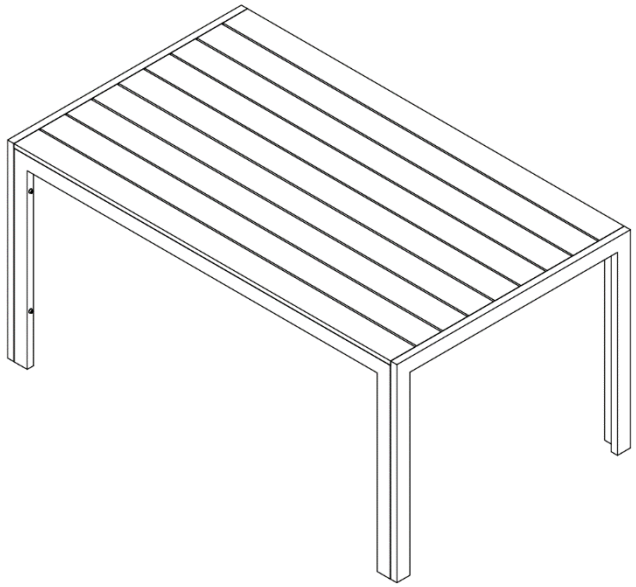	**Step 4:** Finished product.

6. Application

6.1. Safety instructions

The following health and safety information must be read carefully.

Risk of injury
Improper handling during operation can lead to injuries



- Do not use a damaged product.
- Do not make any changes to the product.
- The product is not a children's toy, climbing wall or sports equipment. Children are not permitted to play with the product.

Check the fastening at regular intervals.

6.2. Initial commissioning

Check the product for damage before using it for the first time. The product may only be used if it is undamaged.

6.3. Operation

Check before using the product,

- the proper condition.

6.4. Storage location



- During the winter season, store the product in a dry, well-ventilated place that is protected from the weather as far as possible.

7. Troubleshooting

If the following faults occur during operation, please check the following fault causes using the following table. If the fault cannot be rectified by the measures listed, take the product out of operation.

Error	Possible cause	Solution
The product wobbles or vibrates	- The product stands on uneven surfaces - The fastening screws have come loose - The product is overloaded	- Place the product on a level surface - Tighten the fastening screws - Comply with load limits

If another problem occurs with the product, please contact us.

8. Maintenance and care

Clean the surfaces with a damp cloth and a mild detergent. Do not use aggressive cleaning agents or high-pressure cleaners for cleaning.
Also observe the instructions of the detergent manufacturer.

9. Dismantling

9.1. Safety instructions

Risk of injury
Improper handling during disassembly can lead to injuries



- Secure the product before disassembly.

Disassembly of the product must be carried out in reverse order to assembly. (**see chapter Assembly**)

10. Waste disposal



- Dispose of the product and all components in accordance with local and country-specific regulations to prevent damage to the environment.
- Our packaging is made from environmentally friendly materials. They can be recycled and thus serve as valuable raw materials. Dispose of the packaging material (cardboard, dirty packaging, etc.) separately and professionally in accordance with the applicable national regulations.
- Contact the manufacturer if you are unsure about disposal.
- You can also obtain information on proper disposal from the local waste disposal centres.

Home Deluxe GmbH
Schanzeweg 2
32312 Lübbecke
Germany
Tel: +49 (0)5743 6181-0
www.home-deluxe-gmbh.de

GA-196-00-CANTOS
2024/01